The Source for Pedicure Spas

*Copyright 2010 by J&A USA Inc.*
*Printed in USA*

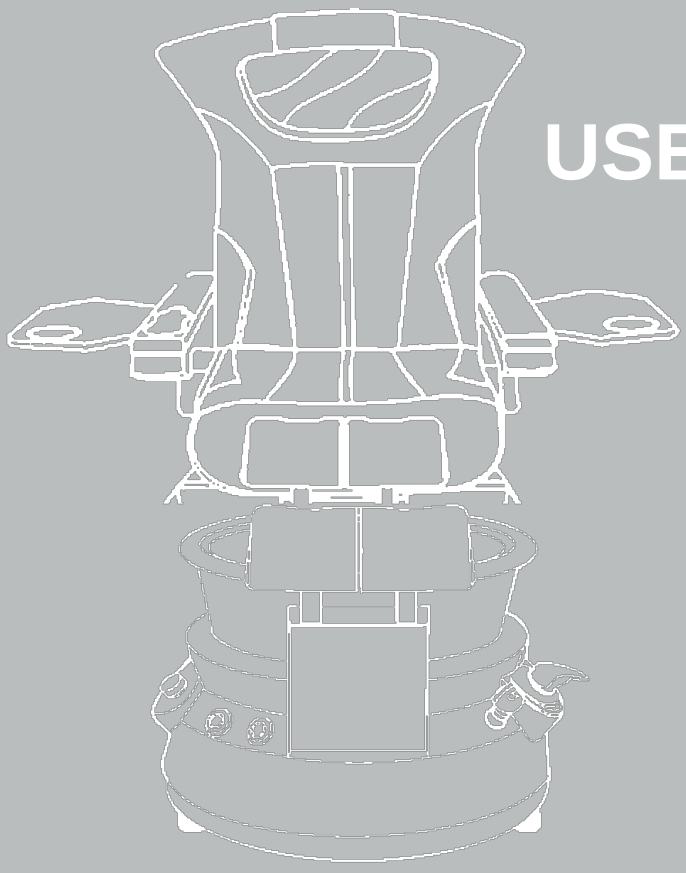

# USER·S MANUAL

## LENOX LX

Please read the User?s Manual thoroughly before using the pedicure spa.

J&A USA INC.

335 CROOKED HILL RD.
BRENTWOOD, NY. 11717

1.631.243.3336
WWW.JAUSAINC.COM

SERVICE & ORDER PARTS

1.631.243.5300
WWW.PEDISPAFIX.COM

# Table of Contents


| | |
|---|---|
| Table of contents | 2 |
| Warranty registration form | 3 |
| Service inquiry form | 4 |
| Introduction & Safety | 5 |
| Important Considerations | 6 |
| Identification | 7 |
| Specification | 8 |
| Dimension | 9 |
| Installation Specifications Summary | 10 |
| Drain Connection | 11 |
| Magna-Jet Pipeless System | 12-13 |
| Ultra Jet Whirlpool Motor | 14 |
| iFill6 Features & Installation | 15-16 |
| Power Discharge Pump (Optional) | 17 |
| Ventilation (Optional) | 18 |
| Remote Controller Functions | 19 |
| Remote Control Connection | 20 |
| Massage Mechanism | 21 |
| Backrest Assembly | 22 |
| Troubleshooting | 23 |
| Disinfecting Pedicure Spa | 24 |
| Massage Troubleshooting | 25 |
| User Recommendation | 26 |
| UL Certification | 27 |
| Backflow Protection Device | 28 |
| Glass Bowl Care & Cleaning | 29 |
| Limited Warranty | 30 |

# Limited Warranty Registration Form

## IMPORTANT

To validate the limited warranty, The Limited Warranty Registration Form MUST be filled out completely and return to J&A USA within 30 days of original purchased date. This Limited Warranty is valid if J&A USA received registration form.

**Serial No.:** J A

**Area Code:** **Phone :**

**Tel (Salon)**

**Your Salon E-Mail Address:**

**Area Code:** **Phone :**

**Cell**

**First Name :** **Last Name :** **Date of Purchase (mm/dd/yyyy):**

**Salon Name :**

**Salon Address :**

**City :**

**State:** **Zip Code:**

**Name of Distributor :**

**City :** **State:** **Zip Code:**

Completed Warranty Registration Form to : J&A USA Inc.
335 Crooked Hill Road Brentwood N.Y 11717
or Fax to 631-243-3339 or email to info@jausainc.com

Questionnaire ( We value your voice!)

1. Are you satisfy with Pedicure spa received? Yes : No :
2. Are you currently using J&A product/s? If so, How long? Yes : No : Year/s
2. If not, What other product ?
4. What is the most important features in choosing Pedicure Spa? Brand Design Function Service Price Other
5. How long in business? Year/s
6. How often are you remodel Your Salon? Year/s
7. Would you purchase J&A product in the future? Yes : No :
8. Do you want to receive a promotion by email ? Yes : No :
9. Any suggestion or Comment

# After Service Inquiry Form

Please use inquiry form as all service request
(Fill out all blanks and Fax or email us, our A/S Dept. will call you promptly)

J&A Service
PEDICURE SPA PARTS & SERVICE

Distributor Name:_____ Date_____

Phone Number:_____

Contact Person:_____

Salon Name:_____

Address:_____

_____

Phone Number:_____ Alternate Phone Number:_____

Contact Person:_____ Best time to reach: _____

Serial Number: _____

Brief Description of Problem:_____

_____

_____

_____

**J&A Service Official Use Only**

Technician Name:_____ Date:_____

Service Status:_____

_____

## Introduction

Thank you for purchasing the **Lenox**Whirlpool Pedicure Spa. This finest Whirlpool Pedicure Spa has been developed by J&A USA,inc. To operate dependably for many years when used properly. Please take time to read this manual thoroughly before installation and use.

# PLEASE READ AND FOLLOW INSTRUCTIONS CAREFULLY!

## Important Precautions

J&A USA requires that you contact your local, qualified electrician and plumber to install your **Lenox**Whirlpool Pedicure Spa. It cannot operate efficiently or safely unless it is provided with adequate electrical power, sufficient water pressure, proper water temperature and required drain facilities. Information on these important subject contained on this manual. We urge you to read it carefully to make sure these requirements are met.

## Precautions

1. Excessive water temperature is dangerous and should be checked before use. Maxinum water temperature should Not exceed 104 degree F (41 degree C.).
2. Always enter and exit the whirlpool Pedicure Spa slowly and carefully.
3. Never bring and/or operate any electrical devices into or near the Whirlpool Pedicure Spa.
4. Do not stand in the Whirlpool tub!
5. This Whirlpool Pedicure Spa has a weight capacity of 250 lbs.

# WARNING

Do not use if you are diabetic, have poor blood circulation, or if any area of your feet or legs are inflamed or have open wounds. Consult a physician before using if you have any kind of fungal infection, swelling, fracture, or persistent pain.

MASSAGE SHOULD BE PLEASANT AND COMFORTABLE.

IF YOU EXPIERENCE PAIN OR DISCOMFORT, DISCONTINUE USE IMMEDIATELY AND CONSULT A PHYSICIAN

This product in whole is in compliance with applicable
UL LISTED standards and requirements for the U.S and Canada
By Underwritters Laboratories Inc.

c UL US LISTED

Some of the components of this product are
Also in compliance with applicbale
Safety standards of following:

CE SA NSF c TÜV

# Important Considerations

## Electrical Service

110V, 60Hz, 15Amp GFCI protected grounded circuit MUST be used to supply power each individual pedicure spa. And the main circuit breaker MUST be at 25Amp. For maximum of two units per each electrical outlet.

## Water Supply

All plumbing connections must conform to local codes.
Water supply to the spa should be provided with adequate water pressure and water temperature.

### Water pressure

To fill the basin correctly up to level, Normal water pressure of 30 to 80 P.S.I is required.

### Water temperature (Water Supply Source)

The hot water supply temperature must not exceed 140°. Adjust your hot water accordingly. For hot and cold water supply fittings and drain fittings location, see below diagram .Carefully connect the water supply line to the appropriate fittings located on the rear of the pedicure spa.

### Pressure / Temperature ( Faucet Specs)

Maximum Pressure: 150 psi (10 bars)
Minimum Pressure: 10 psi (69kPa)
Working Temperature: 33F to 140F constant; intermittent to 180f
(0.6C to 60C sustained; intermittent to 82.2C)
Maximum Recommended Flow: 1.5gpm

### UL LISTED / CE CERTIFIED

Compliance with following Code (s): Uniform Plumbing Code, National Plumbing Code of Canada and international Plumbing Code. Also, Compliance with following Standard (s): ASME A112.18.3M / A112.18.1M, CSA B125, NSF / ANSI 61

ANSI - American National Institute, ASME - American Society of Mechanical Engineers, CSA - Canadian Standard Association IAPMO - International Association of Plumbing and Mechanical Officials, UL - Underwriters Laboratory

All J&A USA products has been compliance with requirements for Whirlpool bath appliances contained in ASME / ANSI A112.18.3M / A112.181M, CSA B125, NSF / ANSI 61 and with dual backflow protection Compliances with following standard (s):AMSE A112.18.3-2002 (R2008) AND ASME A112.18.1-2012 / CSA B 125.1-12

### ** Vaccum Breaker

Due to Town and / or State requirement/s are varies in building code, if the Town and / or State requires Vaccum Breaker, As the Plumber MUST provide Vaccum Breaker according to building code requirement.

## Drain Facilities

The pedicure spa Drain must meet local plumbing codes. **Check valve for Drain (not Provided) Must be installed by a licensed plumber.** Also Pedicure spa must be securely fasten to the floor.

## Installation Summary

The installation must comply with local, state, and federal building, plumbing and electrical codes, where applicable. A licensed plumber should complete the plumbing of the pedicure spa.

Note: Failure to comply with federal, state, or local codes and ordinances will result in warranty being nullified and void.

## IDENTIFICATION

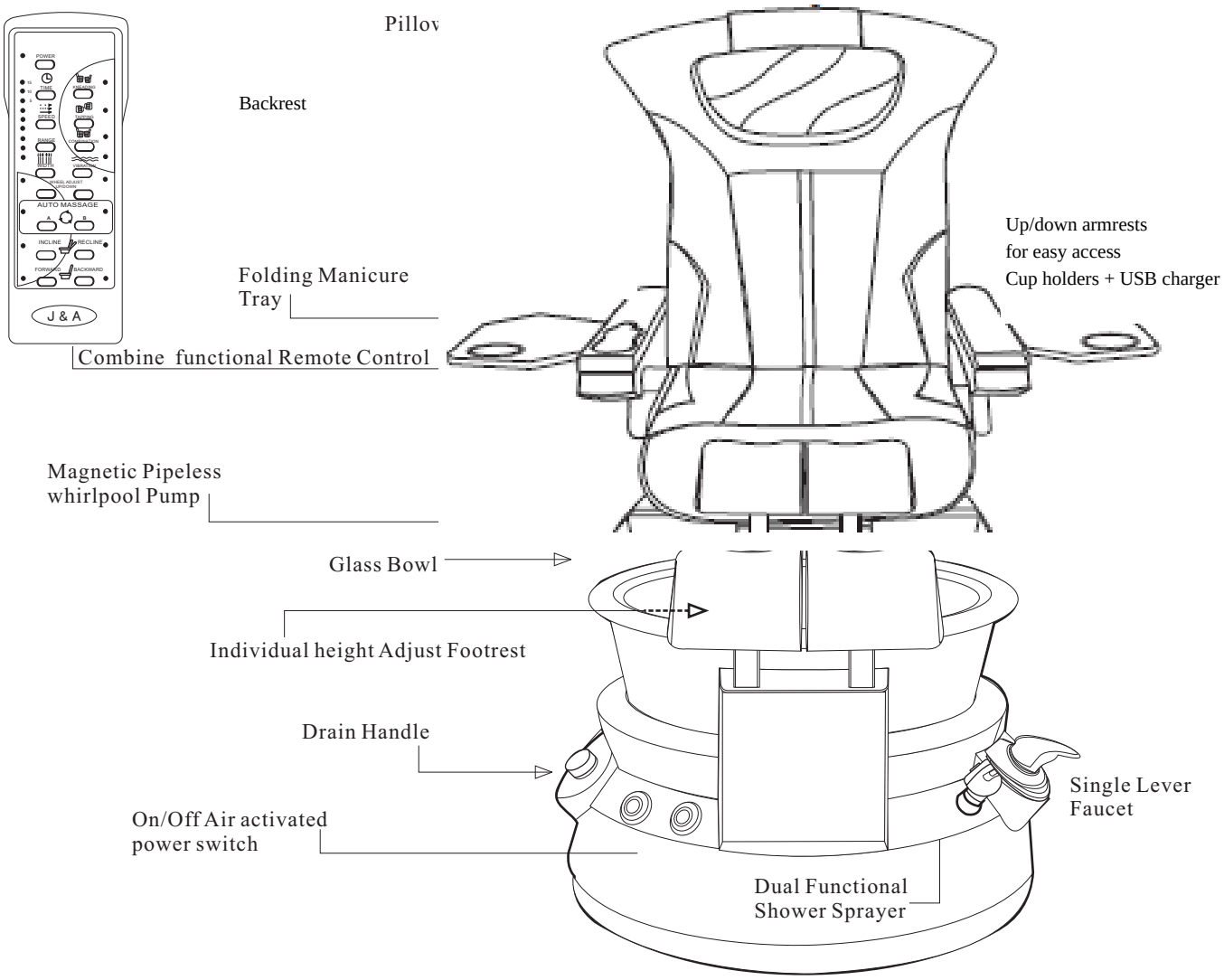


## BASIN

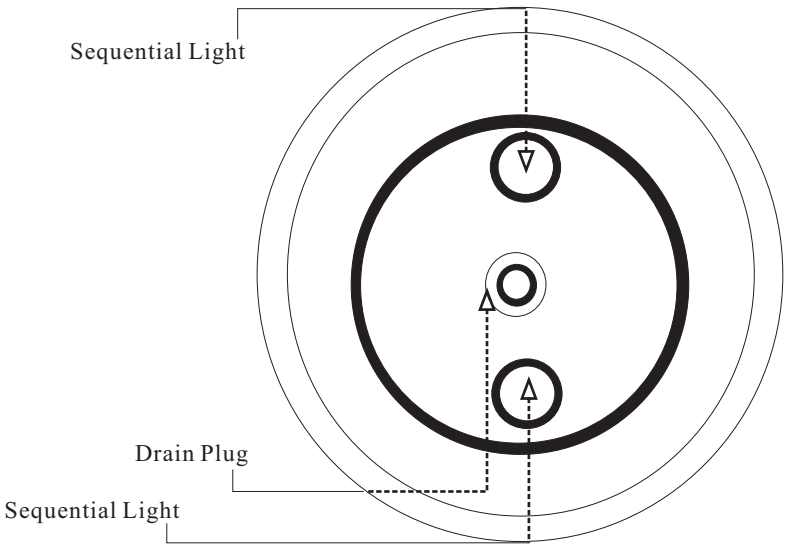


Due to the continuous improvement on all our products: Specification, characteristics, packing, colors, designs are subject to change without notice.

## Specification

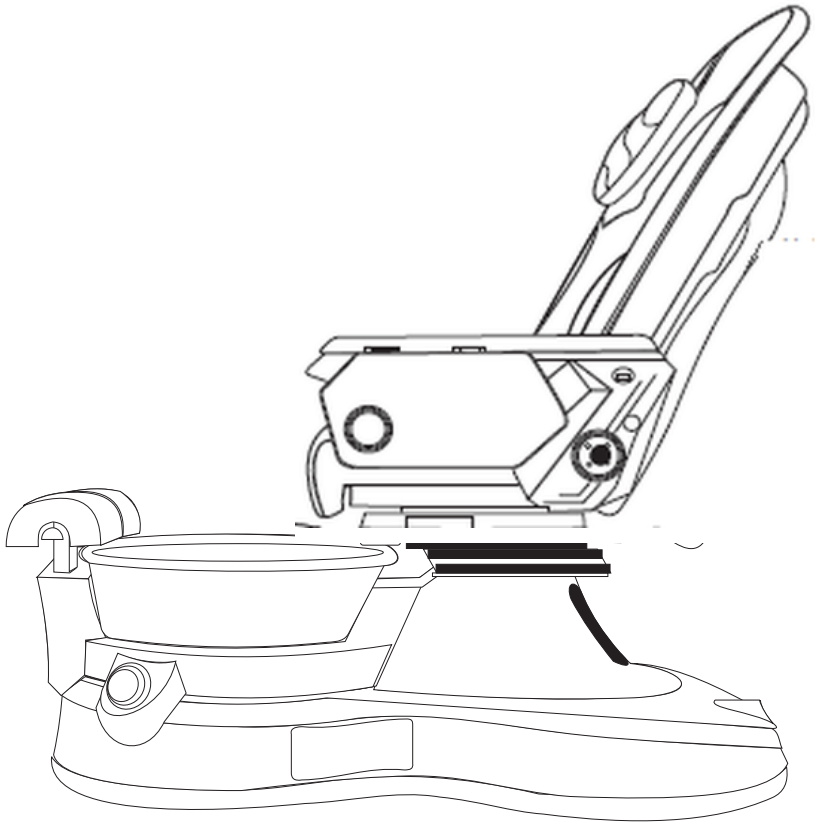

**CAUTION: Pedicure spa must be installed by a licensed electrician and a licensed plumber, conforming to all local and national electrical codes.**

| | | |
|---|---|---|
| Dimension & Weight (Shipping) | Lenox Pedicure Spa Stool | Confirm revised shipping size / weight 20.25L x 27.25W x 17H 20lbs |
| Capacity of Tub | Lenox | |
| Switch | | On/Off Air Activated Switch |
| Power Source | Dedicated 15 Amp. GFCI protected Ground outlet | |
| | Magna-Jet Pipelss | 115 Vac. 60Hz. 3.2 Amp. |
| | Massage System | 120 Vac. 60Hz. |
| Plumbing | Hot Water | 0.5 inches (Fitting Provided) |
| | Cold Water | 0.5 inches (Fitting Provided) |
| | Drain | 1.5 inches (See detailed instruction) |
| Warranty | Epi - Lenox Pedicure Spa | One year Parts and labor |

All J&A products are equipped with Back Flow Prevention Device Dual Check Valve
WATTS 3/8 7,7C and 3/4 H7, H7C (tested and certified to meed ANSI/ASSE standard 1024.)

Due to continuous improvement on all our products, followings are subject to change without notice: specification, characteristics, packing, information, color and design

# Dimension

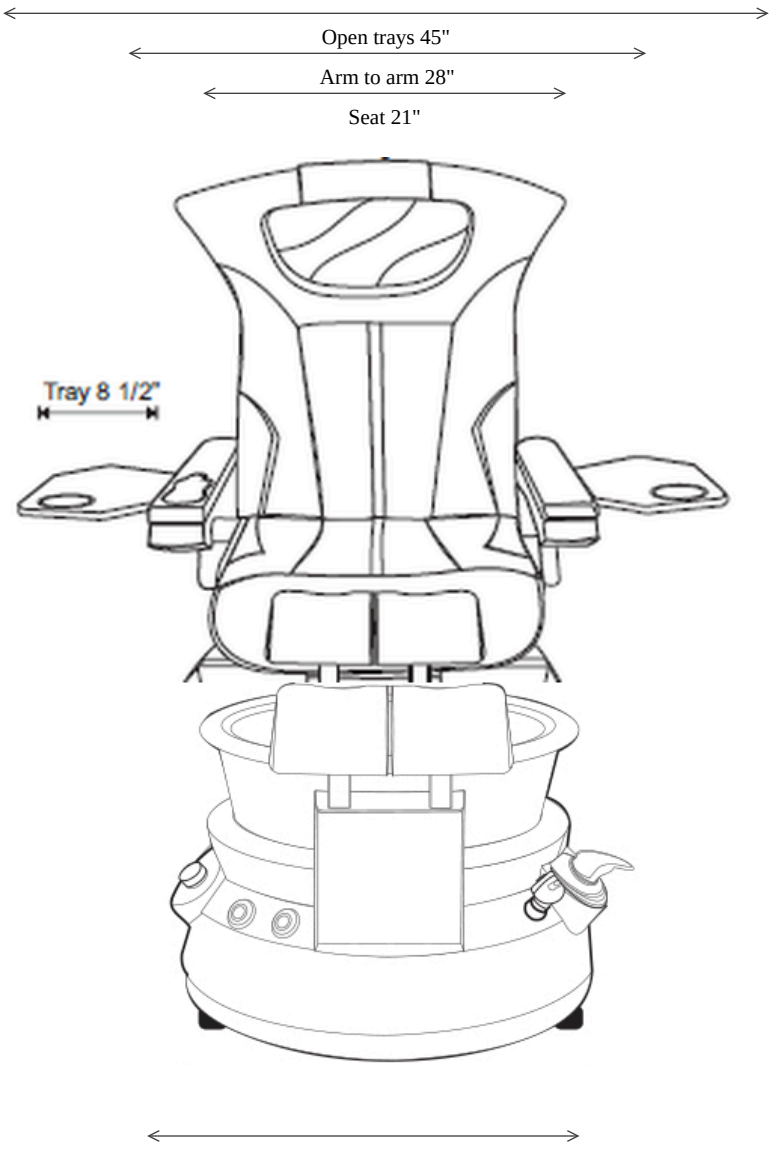


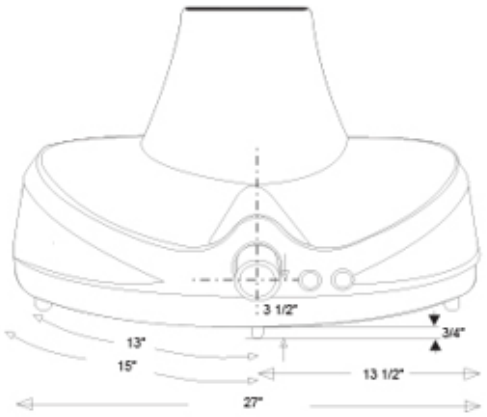


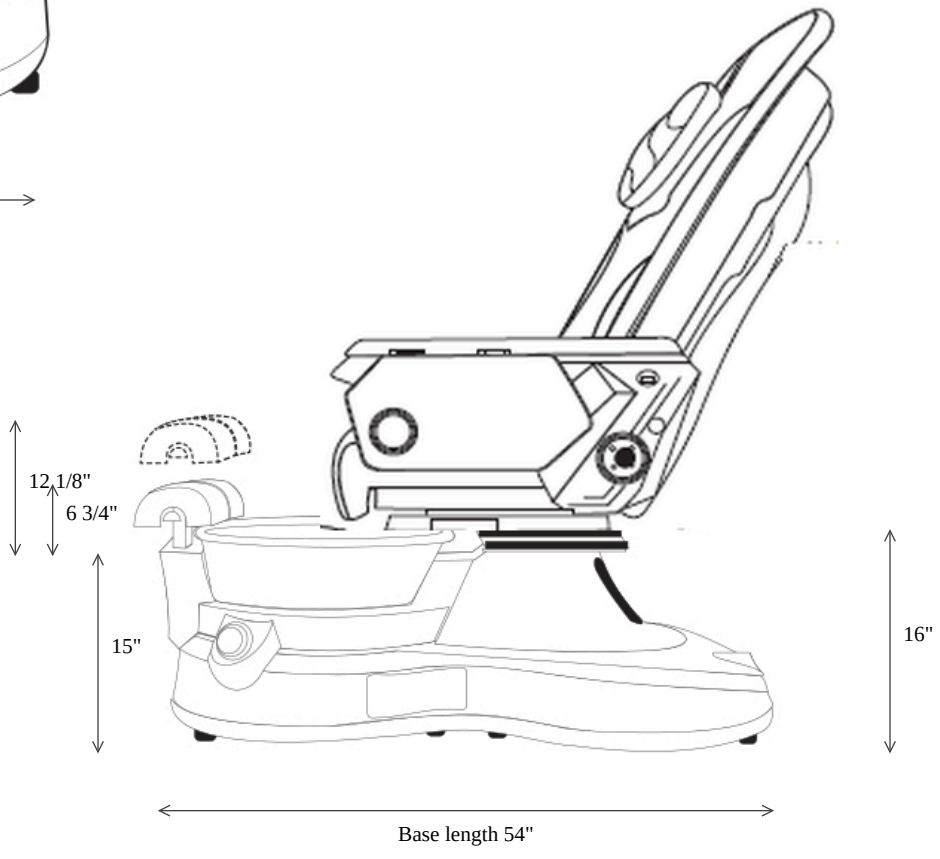


Overall height / reclined clearance: confirm for updated chair. Dimensions in inches; not to scale.

## Installation Specifications Summary

**Warning:** Failure to comply with federal, state or local codes and ordinances will result in warranty being null and void.

As stated, the pedicure spa installation must comply with all plumbing and electrical codes. A licensed plumber and licensed electrician must complete the applicable connections of the pedicure spa.

### Location and support

Select a level location. The floor structure beneath the pedicure spa must be capable of supporting the occupied pedicure spa.

For the seat back to fully recline, the pedicure spa base must be mounted as follow from the wall as shown below:

Reclined / sliding wall clearance: confirm for the updated chair.

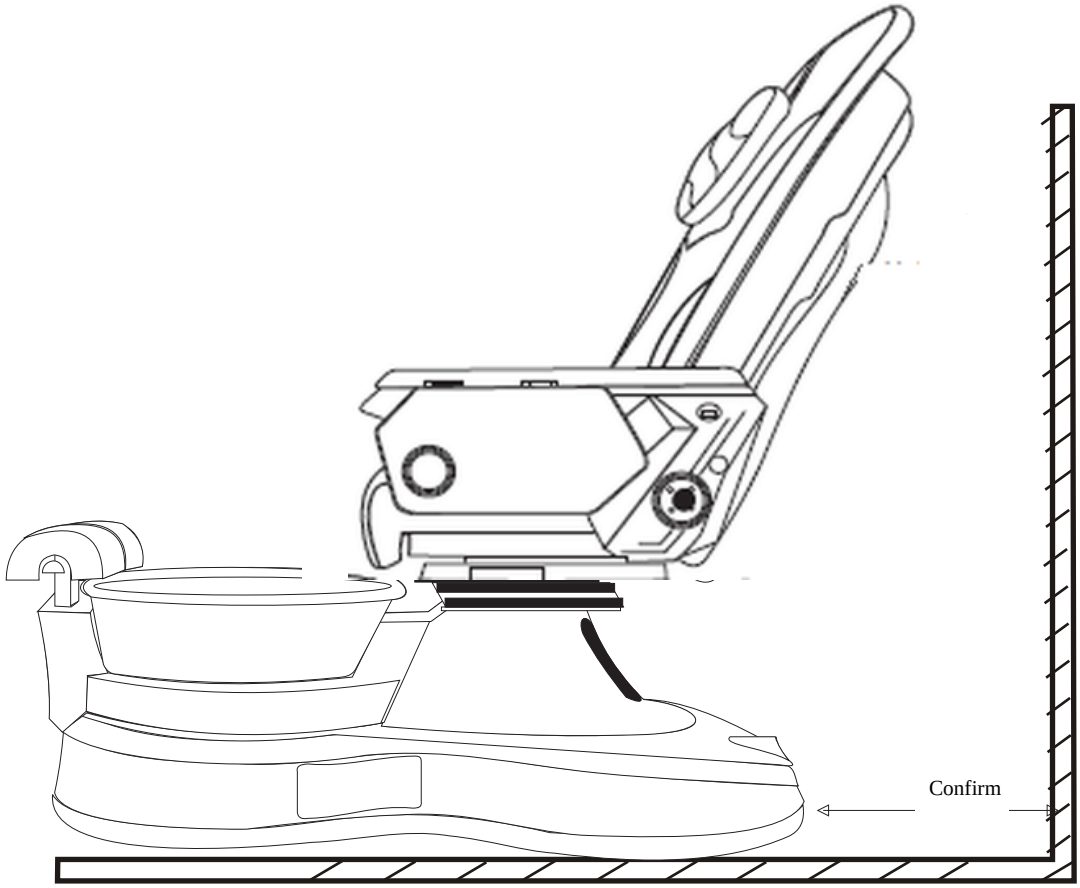


**Due to continuous improvements on all our products, specification, characteristics, packing, color, designs are subject to change without notice.**

## Drain Connection

Wall Drain

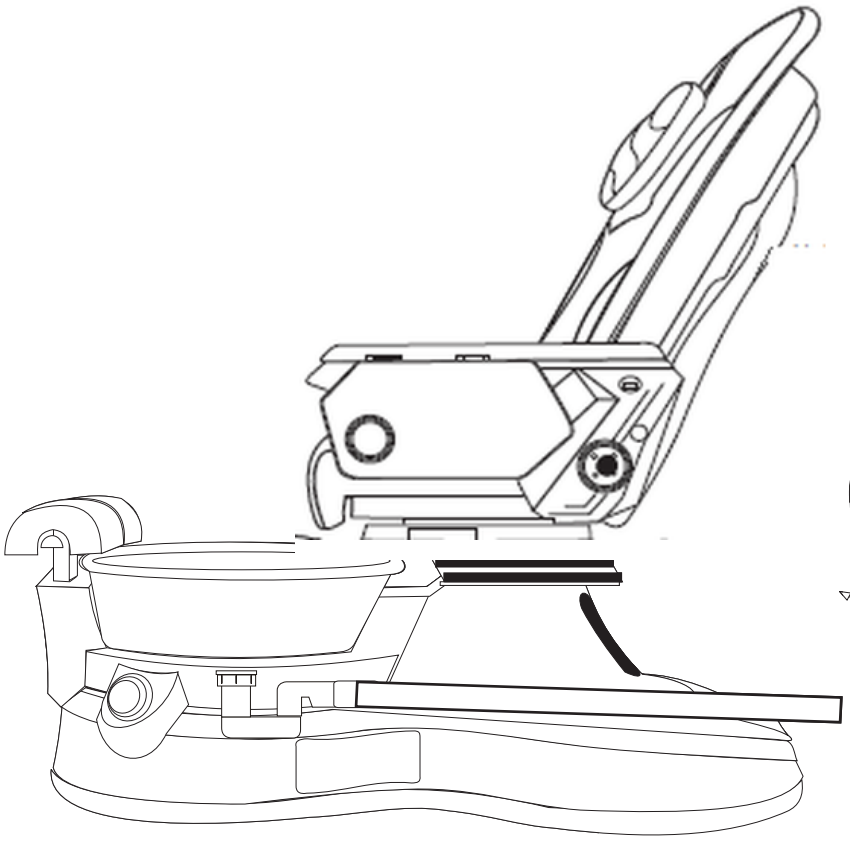

Rear

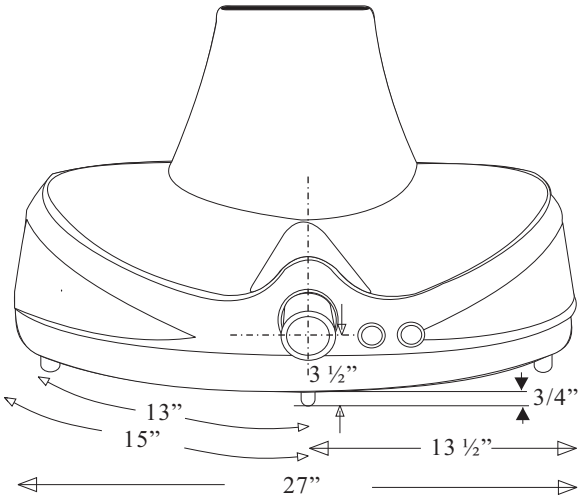


Discharge Pump ( An Option at Request)
(See Detail in Power Drain Pump)

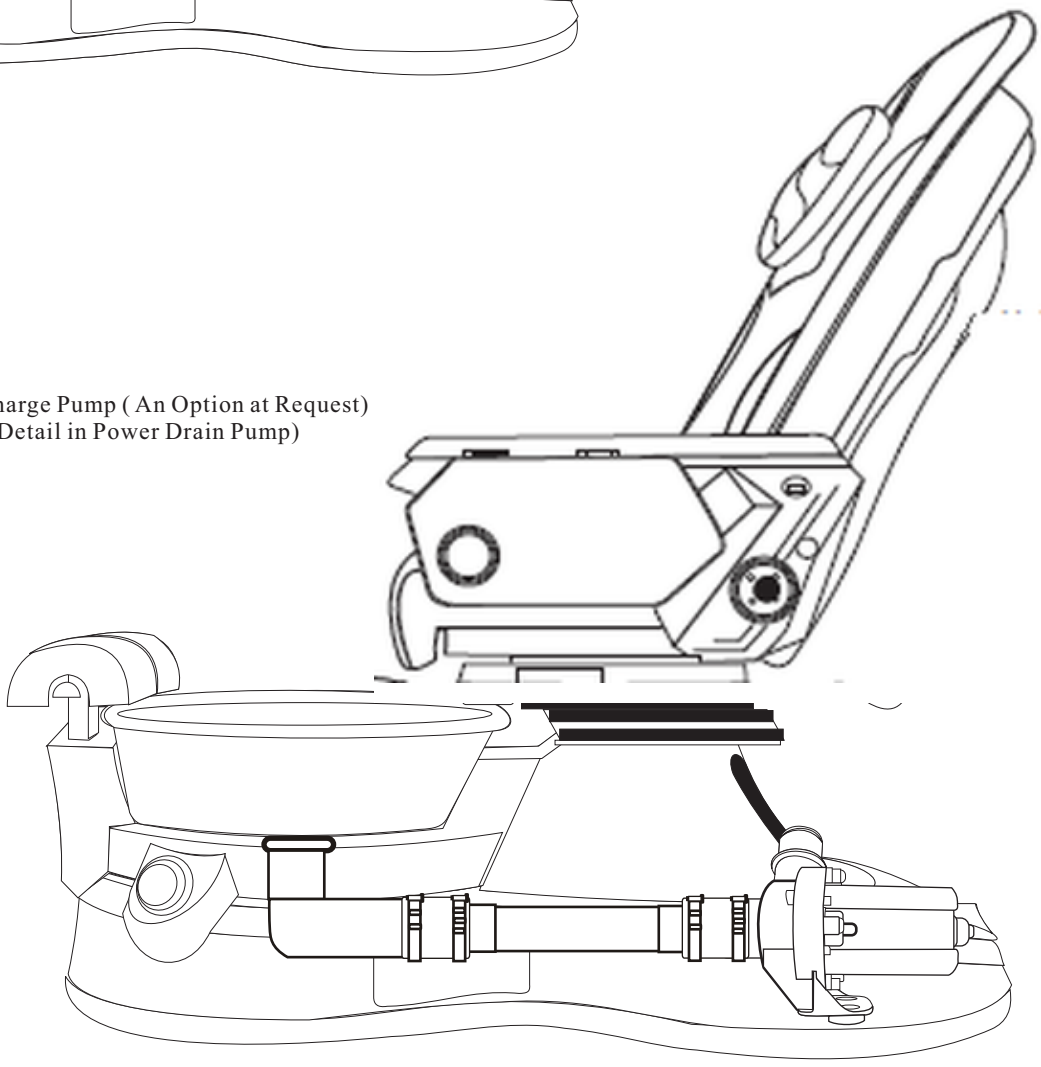

## MAGNA-JET (OPTIONAL)

### Safety Instructions

**When using electrical equipment, Basic safety precautions must be followed to reduce the risk of fire, electrical shock, and injury to Persons.**

1. Read and follow all instructions before using the equipment.
2. Keep electrical cord out of heavy traffic area. To avoid fire hazard NEVER place electrical cord under the rug, near heat Generating devices.
3. Always turn power off the equipment before service.
4. Do not drop or insert any object into any openings.
5. Do not operate any equipment with damaged parts.
6. Any other use not recommended by the manufacturer may cause electrical shock or cause injury to person/s.
7. Never use it outdoors
8. Do not attempt to repair or adjust any electrical or mechanical.

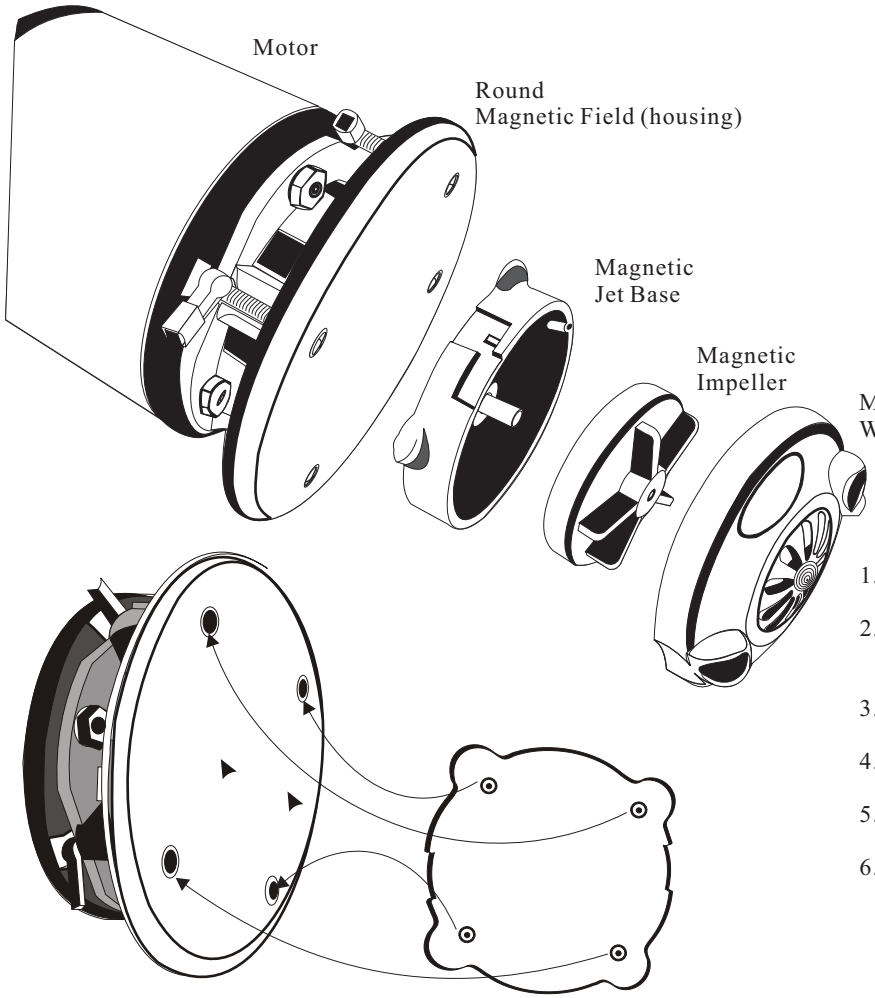




### MAGNA-JET Features

1. Hydro dual massage jet stream
2. Magnetic whirlpool jet cover can be remove for quick cleaning and sanitizing.
3. Built-In electronic sensor for pump control.
4. AC Whirlpool motor (long life)
5. Very low power consumption (27W)
6. Manufactured in USA.

### Cleaning Instruction

1. Turn off the unit and wait until the motor is fully stops.
2. Hold Hydro whirlpool jet cover firmly and pull to separate from the round magnetic field.
3. Turn hydro whirlpool jet cover to left to open and pull out impeller.
4. Use Anti - Bacterial solution (EPA Registered) to clean all parts.
5. After sanitize all parts, place impeller and close hydro whirlpool jet cover to turn right to lock
6. Hold firmly the whirlpool cover jet and gently place it onto the round magnetic field. Do not release the hydro whirlpool jet cover until Jet cover is on the round magnetic housing.

### MAGNA-JET Specifications

Model: MAGNA-JET - 120VAC, 60Hz, 1.0Amp,

Pump: Hydro-Massage Dual jet Flow

Mounting: Single 3.5” hole Diameter
Auto tighten Mounting screws(4)

How to USE Magnetic jet !

WARNING: DO NOT RUN DRY, BASIN MUST FILLED WITH WATER TO LEVEL INDICATOR.

**CAUTION: MAGNETIC JET COVER ASSEMBLY MUST ALIGN WITH DISCHARGE PORT POSITIONED AT 3/9 O'CLOCK.**



WHEN READY TO USE, **MAKE** SURE JET COVER IS POSITIONED AT **3 /9 OCLOCK** FOR PROPER WHIRLPOOL ACTION IN THE BASIN. IF JET COVER IS **NOT** ALIGN AT 3/9 O'CLOCK, WATER WILL SPLASH OUTSIDE OF THE BASIN.

## PROPER WAY TO USE MAGNETIC JET SYSTEM

1- FILL THE WATER TO WATER LEVEL INDICATOR.

2- HOLD MAGNETIC JET FIRMLY TO BRING CLOSER TO THE ROUND MAGNETIC FILED AND DO NOT RELEASE
THE MAGNETIC JET PREMATURELY OR THIS WILL CAUSE IMPACTS ON THE JET COVER AND THE ROUND
MAGNETIC FIELD(HOUSING) SHORTENING THE LIFE EXPECTANCY OF THE JET COVER. WHEN THE JET
COVER NEARS THE ROUND MAGNETIC FIELD, PLACE JET COVER ONTO THE FOUR DIMMPLE AREA (SEE
DIAGRAM). THE JET COVER MUST ALIGN WITH DISCHARGE PORTS POSITIONED AT 3/9 O'CLOCK.

3- WHEN FINISHED WITH CLIENT, DO NOT REMOVE MAGNETIC JET UNTIL MOTOR IS FULLY STOPPED.

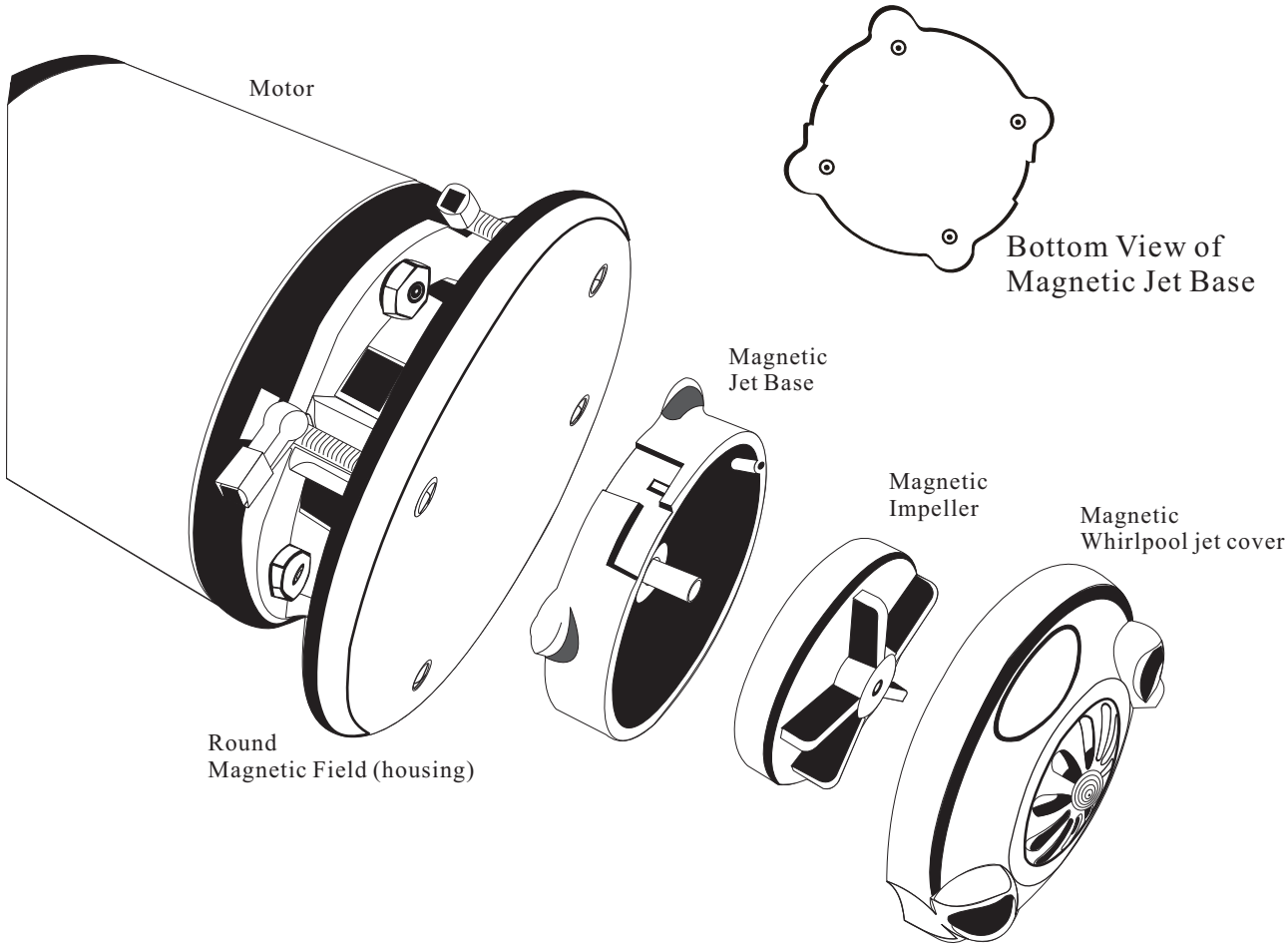

# Ultra jet Whirlpool Motor

## Safety Instructions

**When using electrical equipment, basic safety precautions should always be followed to reduce the risk of fire, electrical shock, and injury to persons, including the following:**

1. Read and follow all instructions before using the equipment.
2. Keep the cord out of heavy traffic area. To avoid fire hazard NEVER put the cord under the rugs, near heat generating devices.
3. Always turn off the equipment before servicing.
4. Do not drop or insert any object into any openings.
5. Do not operate any equipment with a damaged parts.
6. Any other use not recommended by the manufacturer may electrical shock or injury to persons.
7. Never use outdoors
8. Do not attempt to repair or adjust any electrical or mechanical functions on the unit.

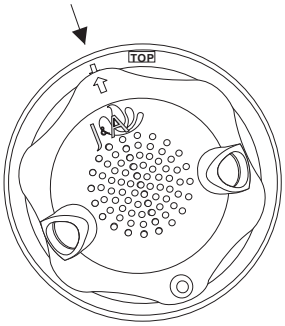


Close Jet Cover
1. Align an arrow line
2.Turn to right (Top indicated)

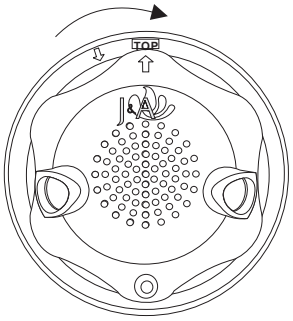


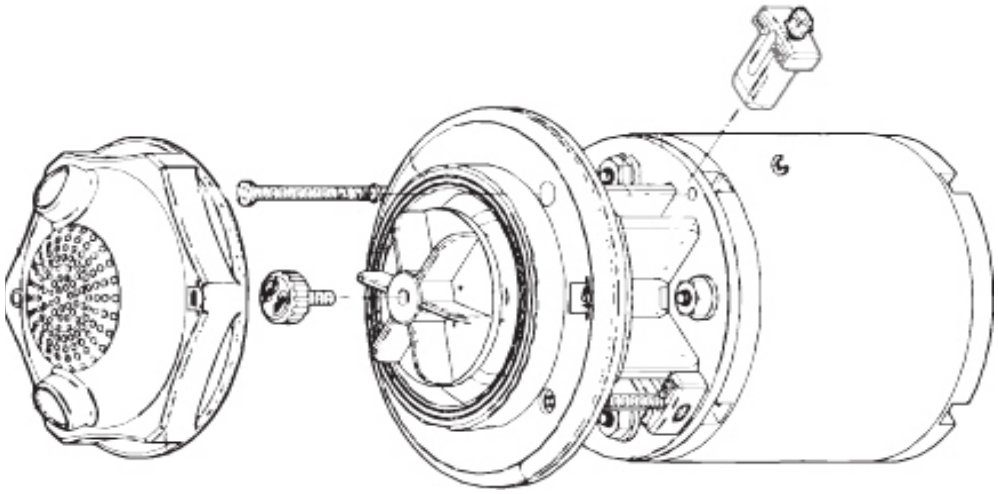

**Ultra Pipeless Jet whirlpool motor**

1. Dual powerful massage jet-streams
2. Jet assembly can be attached from the pump for quick cleaning and sanitizing.
3. Thermally Protected
4. AC motor (long life)
5. Extremely low power consumption .

**Cleaning Instruction**

1. Turn the unit off and wait until the motor is fully stops.
2. Remove the front jet cover and notice the locking screw in the center
3. Remove the locking center screw (Indicated an Arrow) and pull out impeller from housing.
4. Use Anti-Bacterial solution (EPA Registered) to clean all part/s.
5. After sanitization, place impeller onto the motor shaft and fasten with center locking screw ( Opposite arrow)

**Ultra Pipeless jet Whirlpool Motor Specifications**

Model: CS-0216A-MT

Rating: 120VAC / 60Hz, 0.4A - thermally Protected

Pump: Dual whirlpool Jet Flow

Mounting: Single 3.5” hole Diameter
Auto tighten Mounting screws(4)

# FEATURES and OPERATIONS

## *i*Fill 6 Features

- Complete spa controller with intelligent automatic fill features.
- Volume setting from 1 to 10 gallons.
- Can be used with or without disposable liners.
- 3 switched and 1 continuous outlet.
- 1 drain pump-controlled outlet with timer.
- Heavy duty industrial graded brass water valve and flow sensor package.
- Can be operated in both automatic or manual modes.
- Built-in 1-hour timer.
- Reliable, simple and easy to use.
- Universal voltage (120VAC/60Hz or 220VAC/50Hz). 2 Amps max per outlet.
- **UL Recognized**

## Installation Guide

### I) Overall System Integration

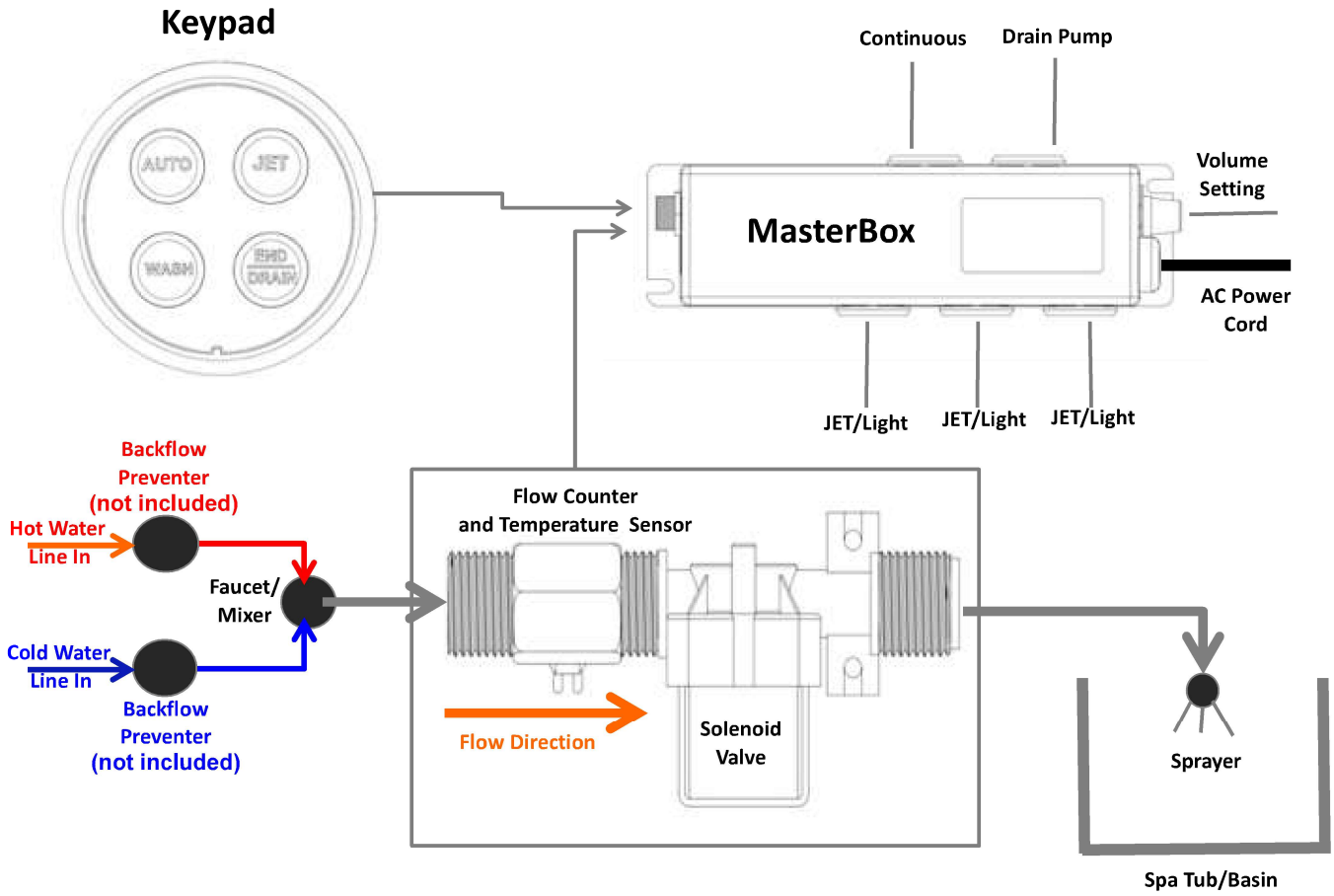


Fig.1: Connection Diagram

**ATTENTION:** 1) BACKFLOW PREVENTERS ARE REQUIRED FOR EVERY SPA TUB. THEY MUST BE INSTALLED ON BOTH HOT AND COLD-WATER LINES TO AVOID LOSING HOT WATER FROM ONE CHAIR TO ANOTHER.

2) IF WATER SUPPLY IS TURNED OFF AT NIGHT, AIR WILL BE IN THE WATER LINES. THIS COULD MESS UP SOME INITIAL IFILL CYCLES IN THE MORNING.

## II) System Installation

**Follow the steps below for iFill 6 installation**

**a)** Connect the Flow Sensor/Water Valve Package to the output of the water mixer/faucet. **Be sure the water flow direction is correct.**

b) Connect the Control Keypad and Flow Sensor/Water Valve Package to MasterBox. See **Fig.1** above

**Automatic Fill Volume Setting:**

The volume of each Auto iFill can be set by the knob located next to the power cord on the Masterbox. Depending on the knob position, the water valve shuts off when the water volume reaches the set value.

## III) How to operate the iFill 6 (Be sure that the faucet is open)

ATTENTION: BEFORE PRESSING THE AUTO iFILL BUTTON. BE SURE THE PREVIOUS SESSION IS COMPLETE AND DRAIN OUT WATER IN THE BASIN. TO UNLOCK THE AUTO BUTTON, PRESS END BUTTON

- Press the **Auto** button to turn On or Off the Automatic fill.
- Press the **JET** button to turn On or Off the JET and color light manually (**1-hour timer**).
- Press the **Wash** button to turn On or Off the water manually (**5-minute safety timer**).
- Press **End/Drain** button to end the session and unlock the Auto fill button. This button will also turn on the drain pump (if connected).

## IV) How to reboot the iFill 6

Please follow the steps below
- Completely drain all the water from the tub.
- Unplug the Masterbox power cord from the power outlet.
- Wait for about 5 seconds and then plug the power cord back into the power outlet.

LENOX LX

## Discharge Pump ( Optional):

Up to 3ft @ +/- 39 sec. with 1/2" Connection to main drain

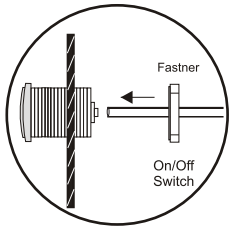





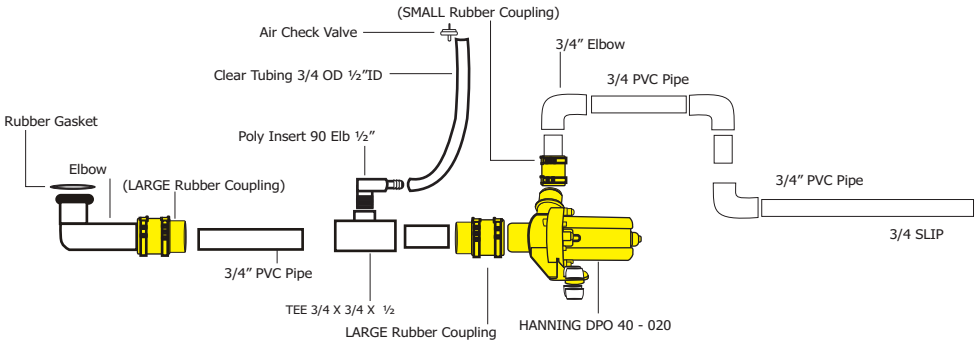


Electrical Control Box
(Located left bottom
inside of base)

3/8" clear Tube
from On/Off Switch
for Part time control box

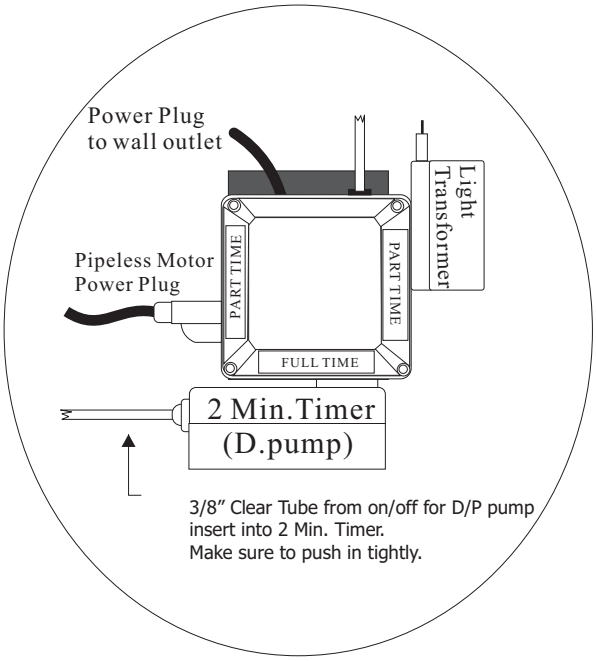


## Installation Instruction

1. Make a hole ( size 1-3/8") for the On/Off switch as shown (see fig 1). Pre-drill required.
2. Placed a 1/8" clear hose into the rear of the switch and on/off switch into the hole.
3. The discharge pump kit is made to fit onto the pedicure unit. (see fig 2)
4. Connect E-Z connector onto the drain elbow.
5. Plug discharge pump outlet into the two minute timer outlet
6. Plug two minute timer into the wall outlet.
7. It is very important that tip of the clear tub remain above the water Level with one loop as shown.

**** Please cut to fit 1" Flex hose to your size****

## Operation Instruction

**Please! DO NOT run dry**

1. Turn to open drain plug.
2. Press On/Off switch to activate timer.
3. At any time, water drain completely from the basin. Press On/Off switch to stop or built in two minute timer

# J&A - Air Ventilation System for Pedicure Spa

Air Ventilation System - improve air quality, can minimize exposure and reduce the health risk of the customer and salon technicians.

## Lenox LX

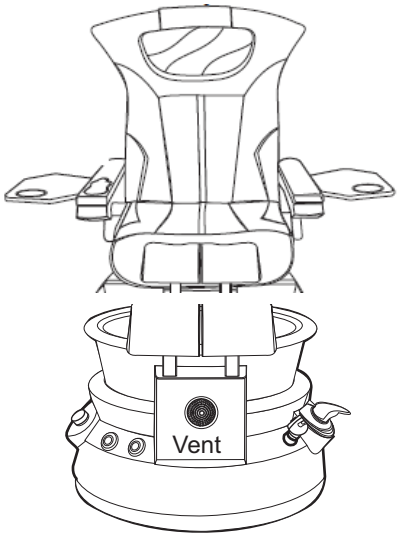


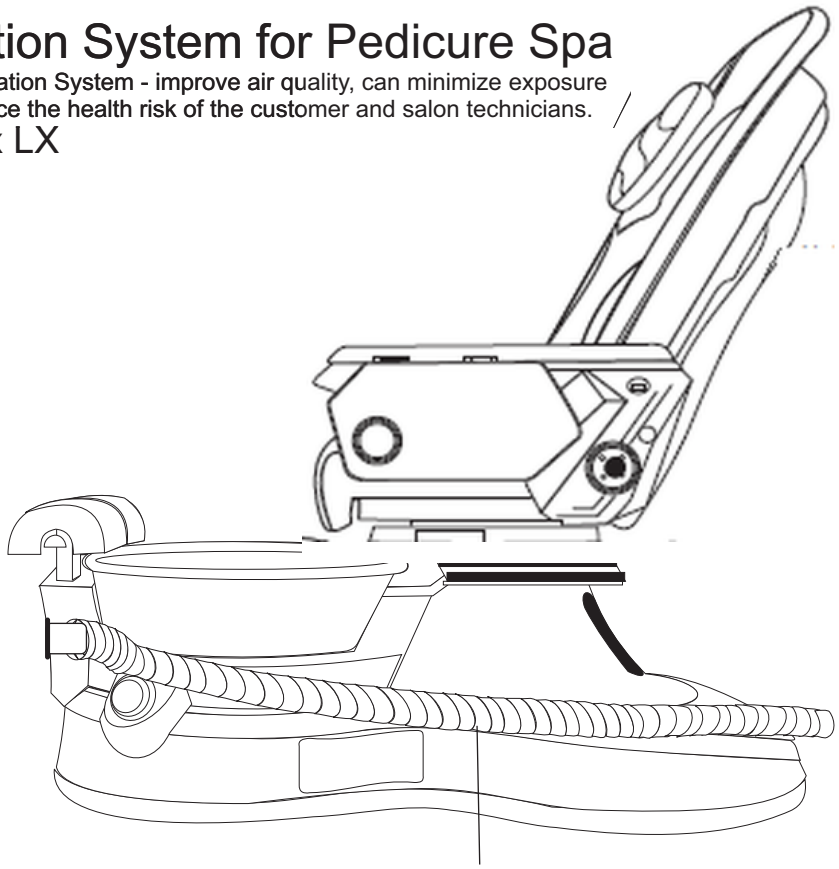

Ventilation Location & Hole Size: 2 3/4”

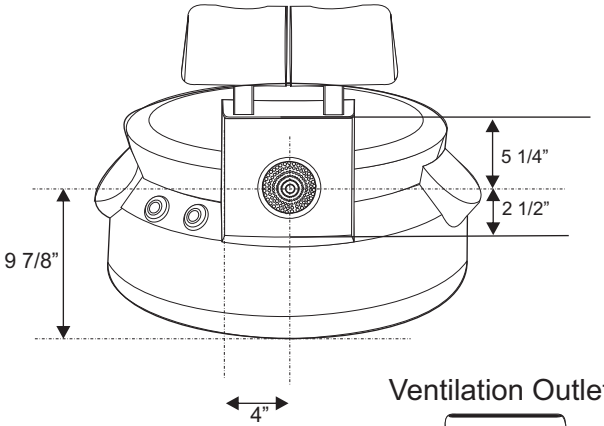


Ventilation Outlet Hole Size: 2 1/2”

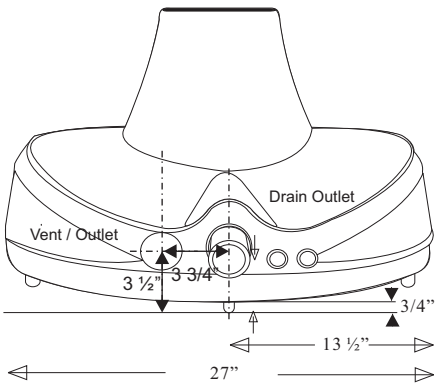


2” Pipe

Example to the wall connection
**NOT** Provided
Always check Federal, State specific ordinances and local code.

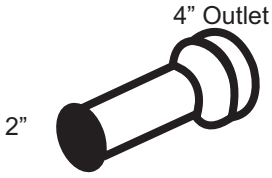


-Mechanical exhaust id required and recirculation is prohibited except that recirculation shall be permitted where the resulting supply airstream consists of not more than 10 percent air recirculated from these spaces.

- For nail salons, the required exhaust shall include ventilation tables or other systems that capture the contaminants and odors at their source and are capable of exhausting a minimum of 50 cfm per station.

Source: IMC Sec.502.20 Manicure and Pedicure Stations Maicure and Pedicure Stations shall be provided with an exhaust system in accordance with 403.3.1.1, Note h

Note h is as follows: “for nail salons, each manicure and Pedicure stations shall provided with a source capture system capable of exhausting not less than 50 cfm per station ...

Disclaimer: Always check Federal, State specific ordinances and Local codes.

ICC
INTERNATIONAL CODE COUNCIL®

## ICC Minimum Ventilation Rates

| Occupancy Classification | |
|---|---|
| People Out door Air flow Rate in Breathing Zone, **cfm/person** | 20 |
| Default Occupant Density, **#/1000 ft$^{2a}$** : | 25 |
| Area Outdoor Airflow Rate in Breathing Zone, **$R_A$cfm/ft$^{2a}$** : | 0.12 |
| Exhaust Airflow Rate, **cfm/ft$^{2a}$** : | 0.6 |

LENOX LX

Remote Controller Functions

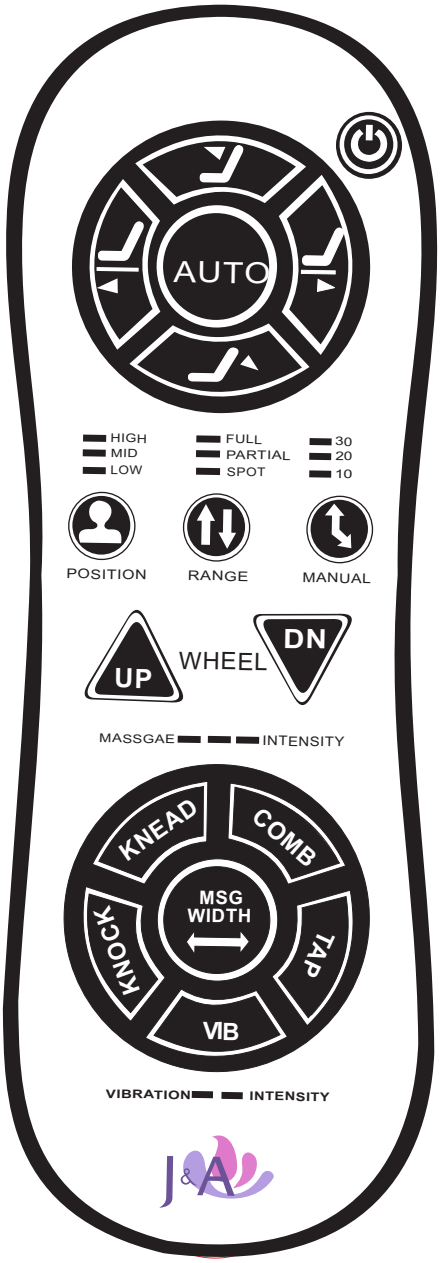


## INCLINE
Press down to move chair To desirable angle.

## FORWARD
Press to hold to move chair to desirable position

## AUTO
Pre-Programed Automatic Massage with 2 Selection

## POSITION
User's Height (HIGH / MID / LOW)

## WHEEL
Adjust Massage Wheels Up and Down to desirable position.

## KNEADING
3 Selections of Kneading Intensity

## KNOCKING
Impulse Tapping Massage.
2 Selections of Knocking Intensity

## VIB
2 Selections of Intensity for Seat vibration Massage.

## POWER
On / Off

## BACKWARD
Press to hold to move chair to desirable position

## RECLINE
Press down to move chair To desirable angle.

## MANUAL
Press for Manual MODE with Time Selection of 10~30 Mins.

## RANGE
FULL / PARTIAL / SPOT
3 Selections

## MSG
Keep Pressing to Massage Wheel to the intended Massage Width.

## COMB
Kneading / Tapping / Knocking Combinations

## TAP
3 Slections of Tapping intensity

## SHIATSU
1. Press Manual / Timer to choose Shiatsu Massage Time Selection

2. Press Massage Range to Select FULL or PARTIAL Travel Position.

3. Press Tapping Width to fine tunecomfort.

DRAFT: Confirm chair-control / mechanism compatibility before release.

# 2nd Remote ControlConnection to Main PCB

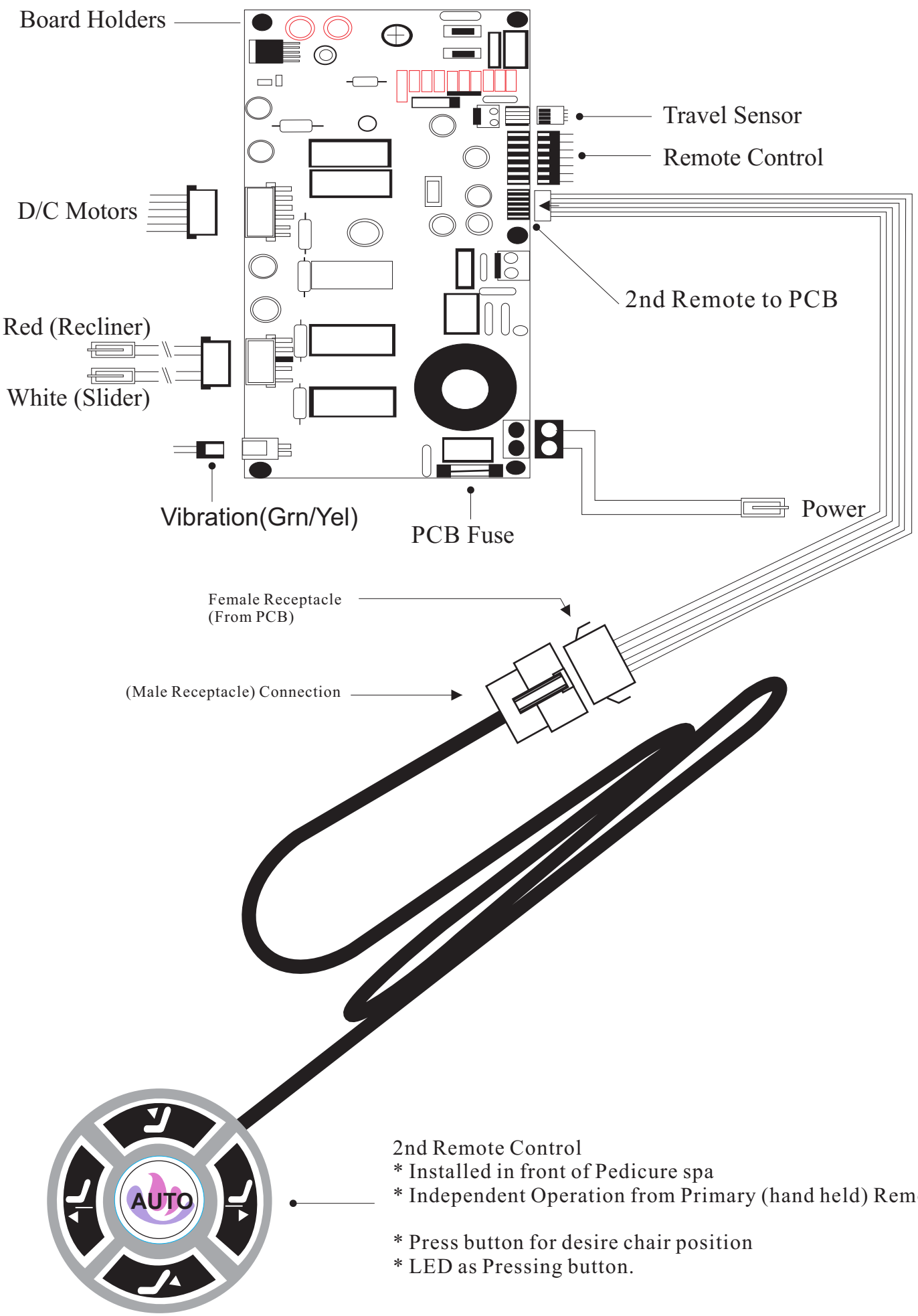


2nd Remote Control
* Installed in front of Pedicure spa
* Independent Operation from Primary (hand held) Remote

* Press button for desire chair position
* LED as Pressing button.

DRAFT: Confirm chair-control / mechanism compatibility before release.

# Massage Mechanism (Lenox LX)

## Massage Mechanism Exposed View

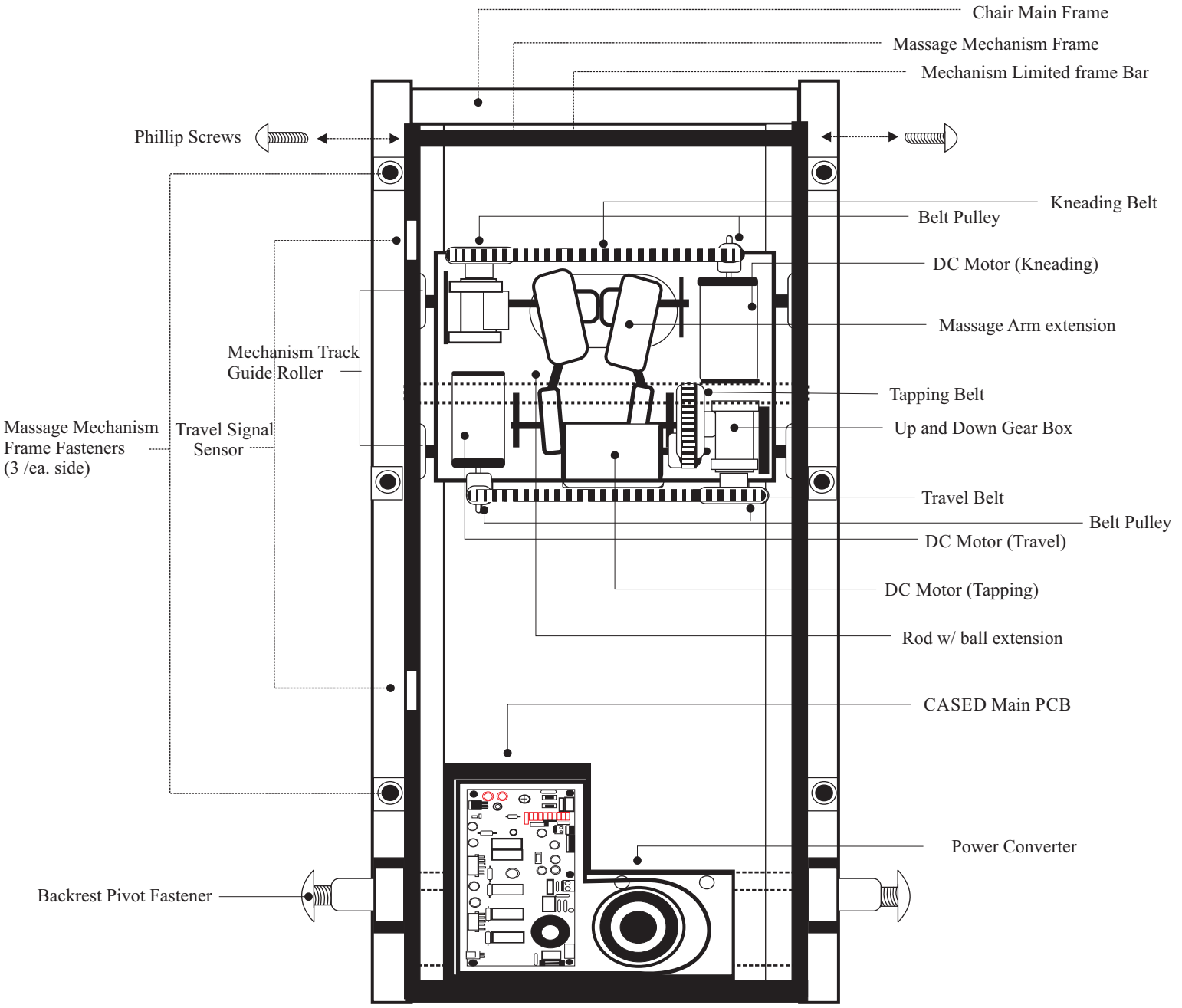


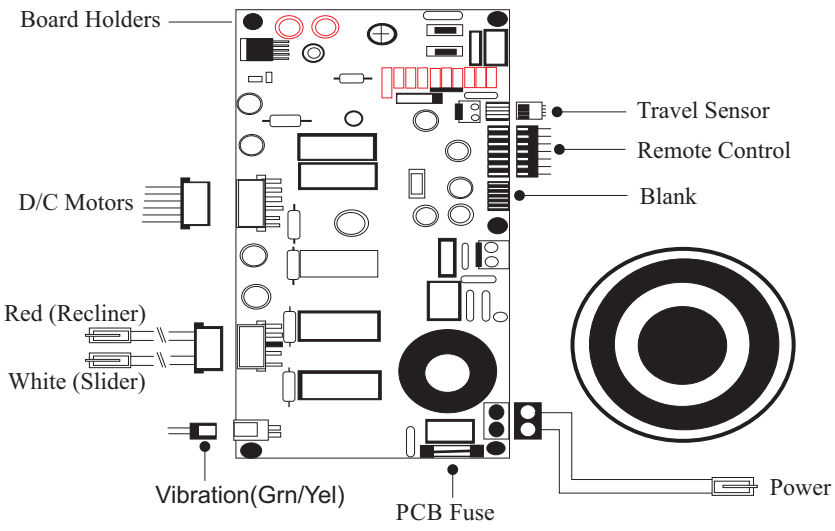


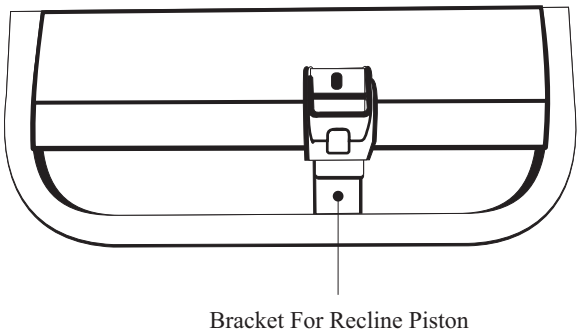


DRAFT: Confirm chair-control / mechanism compatibility before release.

# Placing Backrest in Correct position

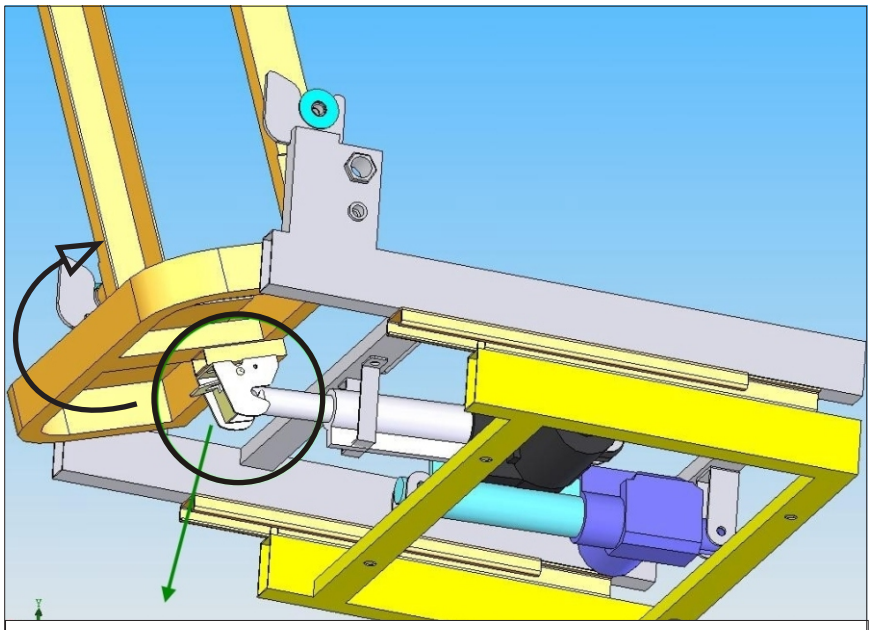

Pull latch upward to release

1

## Detachment of Backrest

* Pull latch lever upward to release from recliner piston.

* As Arrow indicates, bring backrest to fold onto the seat.

* Disconnect all cables ( recliner, slider)

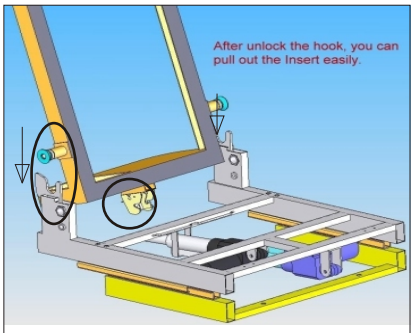


Fig.1

Unlock the hook by pressing latch from recliner piston to pull out insert

2

## Attachment of Backrest

* On the lower portion of both side of the backrest, there are pivots (Fig.1)

* Align both pivots correctly so they rest perfectly onto the “U”pivot frame (Fig.2)

* Once both pivots sit snugly on the “U” pivot frame, align the release latch with the Recliner piston and snap close.

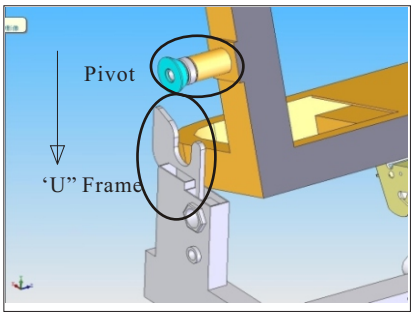


Fig.2

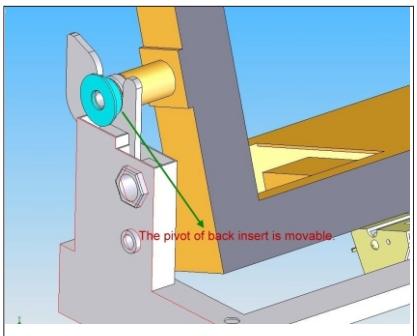


Fig.3

The Pivot of back insert is removable

**Before operating the chair upon attachment, check following items to ensure proper operation**

* Figure 1: shows Pivot and “U”pivot frame at correct alignment / be sure to clear wire

* Figure 2: Close-up view of pivot and “U” pivot frame.

* Figure 3: shows correct pivot alignment.

## Troubleshooting Guide

If there is still a problem after trying the solutions given in the troubleshooting guide, stop using the product immediately so as to prevent accident or injury and unplug the product from the wall outlet. For technical service, please contact J&A technical support at 631-243-5300 with any issue that cannot be resolved using troubleshooting guide.

| | |
|---|---|
| No water movement<br><br>On/Off button - No click sound<br>On/Off button - Click sound | 1-Verify unit is plugged in to live wall outlet.<br>2- Press reset button on the wall outlet.<br>3- Verify air activated tube is plugged in to black control box.<br>4- Ensure that the magnetic jet assembly is properly and securely attached to the basin. |
| Water not Draining<br><br>Not Draining properly<br><br>Not Draining properly with PDP (Power Discharge Pump) | 1- Be sure Drain plug is set high enough to allow water to pass through (Gravity Drain)<br>2- Check for plugged drain and clear if clog is found.<br>3- If pump is heard, Check for plugged drain and clear if clog is found.<br>4- If pump is heard , Check for air lock ( see PDP in manual) follow instruction.<br>5- If pump is not heard, verify discharge pump is properly connected to two minute timer And to black control box.<br>6- If pump is not heard, verify two minute timer |
| Water Pressure is low and/ or not coming out.<br><br>The water sprayer is not working or very little water comes out of the sprayer. | 1- Verify if water utility valve is on.<br>2- Check for loose water connections under the basin and at the rear of the basin<br>3- Check if sprayer screen is clear.<br>4- Verify if water supply breaded hoses are snug and not twisted on the faucet. |
| Losing water<br><br>The basin continually loses water either quickly or slowly | 1- Check drain plug for tears in rubber gasket<br>2- Check drain plug height is correct and bolt below plug is tight.<br>3- Verify drain strainer is tight.<br>4- Verify if water level is correct. |

### Massage Chair

| | |
|---|---|
| Noise during operation<br><br>During tapping and kneading.<br><br>Sound of roller squeaky rubbing against cover.<br><br>Clatter during normal operation.<br><br>Vibrating mechanism noise.<br><br>Sound of recline or slide mechanism. | These noises are a normal part of the product's operation and do not effect its performance in any way. |
| Remote control do not work properly.<br><br>Remote control working with out power light.<br><br>Remote control with power light and not working properly | 1- Verify connection if fully plugged in.<br>2- If chair is not return to normal, stop using the chair and unplug it from the wall outlet. Contact the vendor or J&A service for assistance. |

# DISINFECTING YOUR PEDICURE SPA

**Note:** Please be advised that it is responsibility of purchaser/user to adhere strictly to the following procedure. Any non-compliance will be considered negligence of the purchaser/user.

The Bureau of barbering and cosmetology requires that salons using whirlpool pedicure spas use the following disinfecting Procedures to ensure proper cleaning and maintenance of the equipment, and to prevent bacterial infection.

## After each customer:

1. Drain all water and remove all debris from the pedicure spa.
2. Clean the surfaces and walls of the basin with soap or detergent and rinse with clean, clear water.
3. Disinfect with an EPA - registered disinfectant with bactericidal, fungicidal, and virucidal activity.
4. Wipe dry with clean towel.

## At the end of the day:

1. Remove the intake suction screen, All debris trapped behind the screen of each pedicure spa must be removed. And the screen and the inlet shall be washed with soap or detergent and water
2. Before replacing the screen, Totally immersed the screen into an EPA- registered disinfectant with bactericidal, Fungicidal, and virucidal activity.
3. Finally, flsh the whirlpool system with low-suding detergent and warm OR an EPA - registered cleanser for 10 minutes. Rinse with clean flash water and drain.

## Every other week

1. After following the outlined required cleaning procedures for the end of each day, fill the basin with warm water And 1 teaspoon of 5.25% powdered bleach for each one gallon of water.
2. Circulate the solution through the whirlpool system for 5 to 10 minutes.
3. The solution rests for over night (at least 6-10 hours)
4. The following morning ( before the first customer) drain and flush the system with water.

| | |
|---|---|
| Massage stops in the middle of the program | Reset the main power switch located at the rear of the chair to OFF and back ON after about 5 second.<br><br>1- if the chair return to normal, No further action is required.<br><br>2- if the chair does not return to normal, stop using the chair and unplug it from the wall outlet. Contact the vendor or J&A service for assistance. |
| The roller stop during the massage | Sometimes when the speed is slow than a normal and there is too much pressure to the rollers, it may stop moving temporarily.<br>This is not breakage. Just release pressure by lift body weight. |
| The roller moved up or down and then stop. | Auto timer will cause the rollers to move up to the top of the chair and sometimes roller pass secondary stopper and causes mis-alignmentation of the roller.<br><br>1- contact vendor or J&A service for assistance. |
| The right and left rollers are out of alignment. | The rollers are designed to provide for alternating tapping function, So in the stopped position it seems they are out of sync. This is part of the design, and there is nothing wrong with product. |
| Reclining and sliding cannot be perform | Check to be sure there are no objects between the seat back, where moving mechanism .<br>This unit has maxium weight capacity of 225 lbs. |

DRAFT: Confirm chair-control / mechanism compatibility before release.

# USER RECOMMENDATION

PLEASE READ THE MANUAL THROUGHLY BEFORE USE TO ENSURE CORRECT OPERATION.
THOSE UNDER A DOCTORS CARE OR WHO ARE EXPERIENCING ONE OR MORE OF THE FOLLOWING CONDITIONS SHOULD CONSULT THEIR DOCTOR BEFORE USE.

- You are receiving medical treatment or are feeling ill.
- Your body shows any cute symptoms.
- You have heart disease.
- You are pregnant or having a menstrual period.
- Your doctor has ordered you to rest.
- You have a back disorder resulting from an accident or disease.
- You have a high fever.
- You have sensory disorders.
- You have medical electrical device (e.g. pacemaker).
- You have service interruption in the circulation of the legs.
- You are diabetic.

FAILURE TO DO SO MAY RESULT IN ACCIDENTS AND HEALTH PROBLEMS.





# CERTIFICATE OF COMPLIANCE

| | |
|---|---|
| **Certificate Number** | 20140428-E242637 |
| **Report Reference** | E242637-20040930 |
| **Issue Date** | 2014-APRIL-28 |
| **Issued to:** | J & A USA INC<br>335 CROOKED HILL RD<br>BRENTWOOD NY 11717 |
| **This is to certify that representative samples of** | PLUMBING ACCESSORIES<br>USL, CNL - Commercial-type, Whirlpool Pedicure Spas, Models Cleo, Episode S-type, Lenox, Pacific and Petra Model designation may be followed by any two-letter suffix, not related to safety such as finish, special features etc |
| | Have been investigated by UL in accordance with the Standard(s) indicated on this Certificate. |
| **Standard(s) for Safety:** | Standard for Electric Plumbing Accessories, UL 1951<br>Standard for Motor Operated Appliances (Household and Commercial), CSA C22.2 No. 68-09 |
| **Additional Information:** | See the UL Online Certifications Directory at www.ul.com/database for additional information |

Only those products bearing the UL Listing Mark for the US and Canada should be considered as being covered by UL's Listing and Follow-Up Service meeting the appropriate requirements for US and Canada.
The UL Listing Mark for the US and Canada generally includes: the UL in a circle symbol with "C" and "US" identifiers: c UL us the word "LISTED"; a control number (may be alphanumeric) assigned by UL; and the product category name (product identifier) as indicated in the appropriate UL Directory.

Look for the UL Listing Mark on the product.

William R. Carney

William R. Carney, Director, North American Certification Programs

UL LLC

Any information and documentation involving UL Mark services are provided on behalf of UL LLC (UL) or any authorized licensee of UL. For questions, please contact a local UL Customer Service Representative at www.ul.com/contactus

**Back Flow Protection Device**
**(Dual Check Valve)**

May.1.2014

In accordance with applicable Local or State regulations,
J&A USA Inc., The manufacturer of the pedicure whirlpool spa certifies that the following models are equipped with factory installed Dual Check Valve back flow preventer:

** Lenox Series
** Cleo Series
** Episode Series
** Pacific Series
** Petra Series
** Toepia Series

The specification of the installed device is as follows:

| | |
|---|---|
| DEVICE NAME | DUAL CHECK VALVE BACKFLOW PROTECTION |
| DEVICE MANUFACTURER | NEOPERL INC.<br>Waterbury CT. |
| DEVICE MODEL | JA-NPBX-112310721 |
| DEVICE SPECIFICATION | COMPLIANCE WITH FOLLOWING STANDARD (S):<br>AMSE A112.18.3-2002 (R2008) AND ASME A112.18.1-2012 / CSA B 125.1-12 |
| DEVICE PRESSURE | MAXIMUM PRESSURE: 150 PSI (10 BAR)<br>SERVICE PRESSURE : 80 PSI |
| DEVICE TEMPERATURE | MAXIMUM TEMPERATURE : 150F<br>SERVICE TEMPERATURE : 90F |

ALL MODELS OF PEDICURE SPA MENTIONED ABOVE ARE EQUIPPED WITH THE SUBJECT DEVICE AS STANDARD FEATURE. As for your information, indicated State requires Vacuum Breaker.

** Effective April 01 2005:
ARIZONA, CALIFORNIA, NEBRASKA, NEVADA, OREGON, TEXAS AND WASHINGTON

** Effective June 15 2005:
ILLINOIS, MINNESOTA, WISCONSIN, MICHIGAN

** Effective May 01 2007:
CONNECTICUT

For additional information, Please contact us at 631-243-5300
Very Truly yours,

Technical Support

J&A USA Inc.

335 Crooked Hill Road
Brentwood, NY 11717
Tel: 631.243.3336
Fax: 631.243.3339

www.jausainc.com

# Glass bowl Care and Cleaning

## CARE AND CLEANING

Clean the surface of your ***JSG*** *Oceana* glass product with mild soap and warm water. Wipe the entire surface completely dry with a clean, soft cloth.

## MANUFACTURER'S RECOMMENDED DRAIN INSTALLATION

Drain installation requirements will vary by supplier basin and unit. Manufacturer's drain installation instructions suggest to apply plumber's putty under rim of drain and hand-tighten drain only.
DO NOT OVER - TIGHTEN.

## EXCLUSIVE WRITTEN WARRANTY

## LIMITED ONE - YEAR WARRANTY

***JSG*** *Oceana* Glass products are warranted free of manufacturing defects. ***JSG*** *Oceana* LLC will, at its election, repair, replace, or make appropriate adjustment where ***JSG*** *Oceana* LLC inspection discloses any such defects occurring in normal usage within one year after installation. ***JSG*** *Oceana* is not responsible for installation or removal costs. Proof of purchase requires the original sales receipt from the original consumer purchaser and must accompany all warranty claims.

**Implied warranties, including that of merchantability or fittness for a particular purpose, are expressly limited in duration to the duration of this warranty. *JSG Oceana* LLC disclaims any liability for special , incidental or consequential damages.**

Some States do not allow limitation on how long an implied warranty lasts or the exclusion or limitation or special, incidentals, or consequential damages, so these limitations and exclusions may not apply to you. This warranty gives you specific rights. You may also have other rights which vary state to state.
This limited warranty provides specific legal rights as they apply within U.S.A, and other rights may be available, but may vary from country to country.

**Crystalline material and air bubbles are a unique characteristic of art glass. They are an inherent part of the glass making process and are not detrimental to the mechanical strength or function of the glass basins. Each piece of *JSG Oceana* is individually inspected for durability and superior performance.**

# Limited Warranty

Pedicure Spa

**IMPORTANT**

To validate the limited warranty, The Limited Warranty Registration Form MUST be filled out completely and return to J&A USA within 30 days of original purchased date. This Limited Warranty is valid if J&A USA received registration form.

J&A USA Inc. Pedicure Spas has designed and manufactured with the highest standards and expressly warrant the pedicure spa as follows: To the original owner of the J&A USA Inc. Pedicure Spa may repair or replace, at its option, any pedicure spa found to be defective in material or workmanship upon inspection by a authorized representative of J&A USA Inc. This limited warranty covers as domestic geographic area as following:

**Base** - Twenty four (24) month from date of shipment from J&A USA facility.
**Components / Parts** - Twenty four (24) month from date of shipment from J&A USA facility.
**Stool** - Ninety (90) days from date of shipment from J&A USA facility.
**Shipping Costs** - Twelve (1st-12) month from date of shipment. J&A USA will cover normal shipping costs associated with replacement parts. Expedited shipping cost will incur an additional charge.
- Twelve (2nd-12) month from date of shipment associated with replacement part/s. shipping will be charged
**Labor** - Twelve (12) month from date of shipping, J&A USA Inc will cover reasonable labor costs associated with the installation of replacement parts found to be defective in material or workmanship upon inspection by authorized representative of J&A USA INC.
**No labor cost or replacement parts will be covered under this limited warranty if at the sole discretion of J&A USA INC. it is determined a failure was caused by negligence, accident or improper use, improper installation or lack of proper maintenance as in the Owner's Manual.**

**NO CONSEQUENTIAL, INCIDENTAL, CONTINGENT, INDIRECT, SPECIAL OR OTHER DAMAGES WILL BE ALLOWED.** This warranty is null and void if the pedicure spa is removed from its original installation or is not installed accordance with specifications of pedicure spa or national, state or local codes, regulation and ordinances. Furthermore, this limited warranty is null and void if the pedicure spa is subjected to improper installation or maintenance, negligence, improper cleaning or any other circumstance beyond J&A's control. To validate limited warranty, pedicure spa must be installed by a licensed plumber and/or electrician in accordance with local and / or State code and pedicure spa installation instructions.

**Warranty Exclusion**

1- Unauthorized repairs and/or modification or tampered in any way.
2- Damage due to freight, accident, natural disaster and /or abuse or misuse
3- Wear & Tear, Stain, fading or discoloration of seat, back cover, Pillow Armrests ( Upholsteries), Tray or Footrest
4- Fading, discoloration or staining of basin or Any portion of surface of pedicure spa caused by water additive or improper water treatment (such calcium built up) and/or cleaning agents/s
5- Damage or malfunction due to improper installation including but not limited to, failure to comply with all national, state and local plumbing, electrical and building codes.
6- Magnetic jet assembly (base, impeller and cover)
7- Damage drain pump due to residue built up in drain pipe and / or due to the lack of maintenance.

**Parts for which labor / Service is NOT COVERED** - Following components are simple to replace and DO NOT require a service technician. Therefore, though the part is covered under the guidelines of the warranty agreement.

1- Panel
2- Jet cover, impeller and / or jet assembly
3- Faucet Cartridge, Shower Head
4- Footrest
5- Air actuate On/Off Button
6- Drain Plug
7- Remote control
8- Basin Bowl

During the Limited Warranty period, J&A will, at its sole discretion, repair or replace any defective component. All component parts removed under this Limited Warranty become property of J&A USA Inc. And all replacement component /s MUST be return to J&A USA Inc. within 20 days of replacement. If not, replaced component/s will be charge as its cost/s.This limited warranty is for the original owner and **not** transferable. The original owner agrees by using pedicure spa the obligation of J&A USA shall not extend to indirect or contingent damage or injury. Furthermore, the obligations of J&A are limited to those set forth herein. The limited warranty is the exclusive remedy and is in lieu of all other warranties, express or limited, including but not limited to, any implied warranty of fitness or merchantability for a particular purpose. No distributor or other person has the right or authority to bind J&A USA INC to changes to this limited warranty. Consequently, J&A USA INC is **not** responsible for such warranties or representations.

**Limitation of liability**

TO THE EXTENT ALLOWED BY LOCAL LAW, EXCEPT FOR THE OBLIGATIONS SPECIFICALLY SET FORTH IN THIS WARRANTY STATEMENT, IN NO EVENT WILL J&A OR ITS THIRD PARTY SUPPLIERS BE LIABLE FOR ANY DAMAGED CAUSED BY J&A'S PEDICURE SPA OR THE FAILURE OF J&A PEDICURE SPA INCLUDING ANY LOST PROFIT OR SAVINGS, BUSINESS INTERRUPTION, LOSS OF USE OR ANY OTHER COMMERCIAL OR ECONOMIC LOSS OF ANY KIND, OR SPECIAL, INCREMENTAL, OR CONSEQUENTIAL DAMAGES. THIS LIMITATION OF LIABILITY APPLIES WHETHER DAMAGES ARE SOUGHT, OR A CLAIM MADE, UNDER THIS LIMITED WARRANTY OR AS A TORT CLAIM, A CONTRACT CLAIM OR ANY OTHER CLAIM.

The Source for Pedicure Spas

*Copyright 2010 by J&A USA Inc.*
*Printed in USA*

**J&A USA, INC**

335 CROOKED HILL RD., BRENTWOOD, NY 11717

631.243.3336 - WWW.JAUSAINC.COM

SCAN ME
www.jausainc.com

**SERVICE & ORDER PARTS**

631.243.5300 - WWW.PEDISPAFIX.COM

SCAN ME
www.pedispafix.com