LENOX LX

THE PEDICURE SPA COLLECTION



Designed for your salon.

Three bases. Six chair-top colors. Your choice of bowl finish.

THE NEW COLLECTION

A beautiful setting. A personal signature.

Coordinate your pedicure area with a chair and finish palette that reflects your salon.



03

BASE FINISHES

Prestige Gray, White and Sahara Gold.

06

CHAIR-TOP COLORS

Soft neutrals, classic dark tones and a bold red.

03

BOWL FINISHES

Gold, Black or Crystal with any base.

54 POSSIBLE COMBINATIONS

Three base finishes x six chair-top colors x three bowl finishes. Choose each finish independently to suit your salon.

FEATURES & DETAILS

Made for the experience. Finished with style.

A closer look at the chair, armrests and signature Lenox LX spa base.



Padded head pillow

A cushioned head pillow and contoured upholstered backrest with distinctive stitched detailing.



Adjustable armrests

Adjust the armrests up or down for easy access. Integrated cup holders and a USB charger add everyday convenience.



Adjustable footrest

The padded footrest above the glass bowl supports comfortable positioning during the pedicure.



Pipeless whirlpool

A pipeless circulation system simplifies bowl cleaning and maintenance between services.

CHAIR-TOP COLOR COLLECTION

Prestige Gray

GOLD, BLACK OR CRYSTAL BOWL AVAILABLE

Six chair-top colors shown below. Images illustrate the black bowl; choose any of the three bowl finishes with this base.



● **Black**



● **Chocolate**



● **Grav**



● **Red**



● **White**



● **Beige**

Product images are visual mockups. Actual colors may vary.

CHAIR-TOP COLOR COLLECTION

White

GOLD, BLACK OR CRYSTAL BOWL AVAILABLE

Six chair-top colors shown below. Images illustrate the crystal bowl; choose any of the three bowl finishes with this base.



Black



Chocolate



Grav



Red



White



Beige

Product images are visual mockups. Actual colors may vary.

CHAIR-TOP COLOR COLLECTION

Sahara Gold

GOLD, BLACK OR CRYSTAL BOWL AVAILABLE

Six chair-top colors shown below. Images illustrate the gold bowl; choose any of the three bowl finishes with this base.



Black



Chocolate



Grav



Red



White



Beige

Product images are visual mockups. Actual colors may vary.

CUSTOMIZE YOUR COLLECTION

Mix your finishes. Make it yours.

Choose the base, chair top and bowl independently to create your preferred combination.

01 / CHAIR-TOP COLOR

- Black
- Chocolate
- Gray
- Red
- White
- Beige

02 / BASE FINISH

- Prestige Gray
- White
- Sahara Gold

03 / BOWL FINISH



Gold



Black



Crystal

ANY BOWL FINISH. ANY BASE.

Gold, Black and Crystal bowls can be selected with Prestige Gray, White or Sahara Gold bases.

J&A USA INC.

LENOX LX

COMPLETE CHAIR / DIMENSIONS

FRONT VIEW

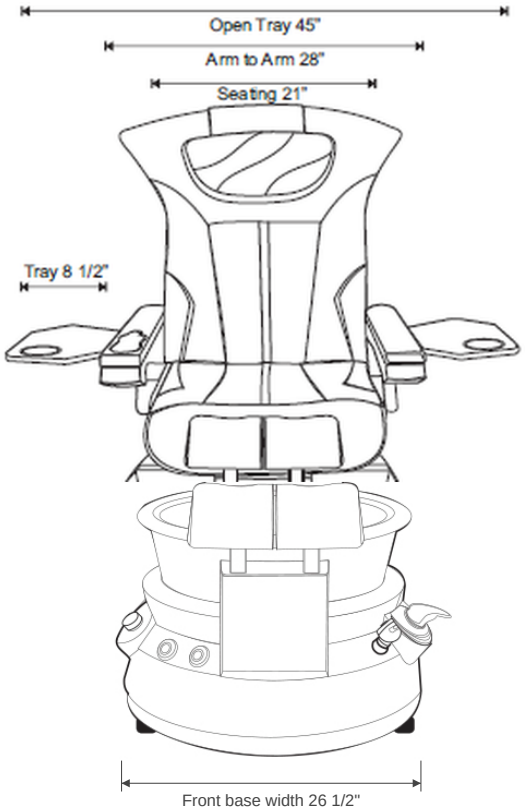

BASE / REAR VIEW

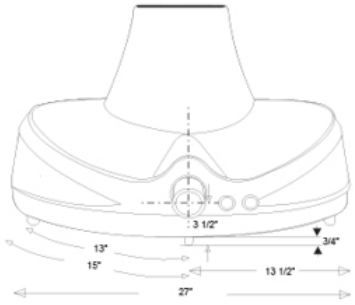

SIDE VIEW

Tray width: 8 1/2" | Seat width: 21" | Arm to arm: 28" | Open trays: 45"

Overall assembled height and reclined clearance require confirmation. Dimensions in inches. Not to scale.

THE COMPLETE COLLECTION

LENOX LX

THREE BASE FINISHES. ONE BEAUTIFUL COLLECTION.



Prestige Gray

Black chair top

White

White chair top

Sahara Gold

Beige chair top

Your salon. Your signature.

Choose your base, chair-top color and bowl finish with your J&A; distributor.